P 400

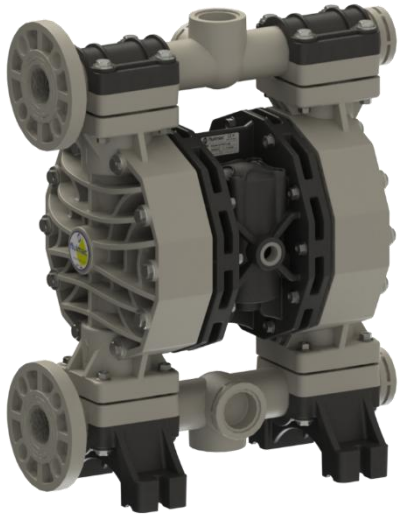

POLYPROPYLENE

WEIGHT
18,2 kg

TEMPERATURE
-4°C +65°C

TECHNICAL DATA

Fluid connections	**1" 1/2 BSPP - DN 40**
Air connection	**1/2" BSPP**
Max. flow rate	**380 lt/min**
Max air pressure	**8 bar**
Max delivery head	**80 m**
Max suction lift dry	**5 m**
Max suction lift wet	**9,8 m**
Max solid passing	**8 mm**
Noise level	**78 dB**
Max viscosity	**40.000 cps**
Displacement per stroke	**1200 CC ~**

Displacement per stroke may vary based on suction condition, discharge head, air pressure and fluid type.

Ex II 3/3 G Ex h IIB T4 Gc

Ex II 3 D Ex h IIIB T135°C Dc X

PERFORMANCE

The curves and performance values refer to pumps with submerged suction and free delivery outlet, with water at 20 °C. These data may vary according to the construction materials and hydraulic conditions.

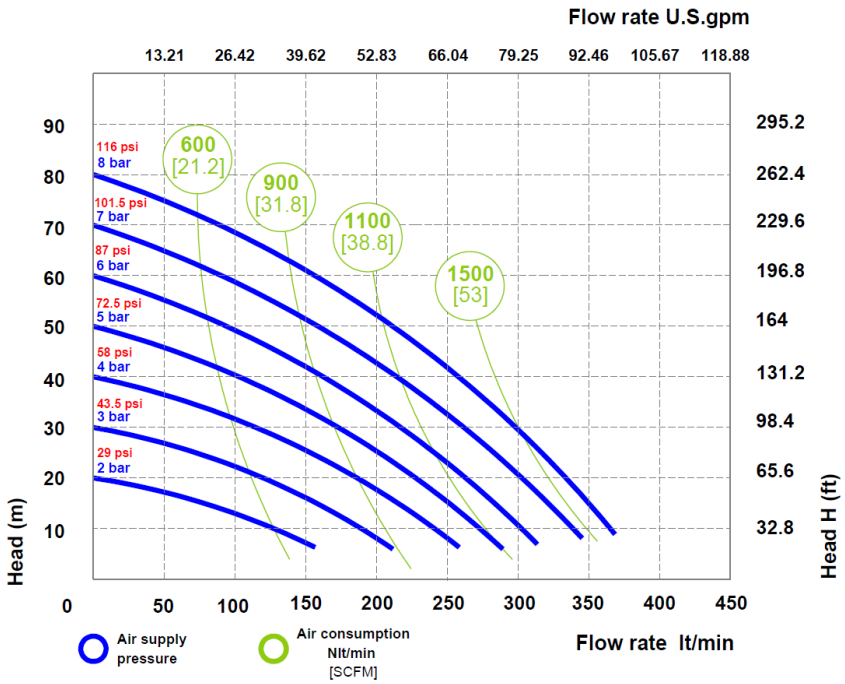

Made in Italy

fluimac pump solution

FLUIMAC S.r.l. - Via Breascia ,1 - 21049 - Tradate - VA - ITALY
info@fluimac.com - www.fluimac.com
tel. +39 0331 866688 - Fax +39 0331 864870
P.I./VAT 03259160129

ISO 9001:2008

P 400

COMPOSITION

MODEL	CASING	DIAPHRAGM	BALLS	SEATS	GASKET	CONNECTIONS	ATEX	PORTS
P0400	P = PP	HT = HYTREL+PTFE MT = SANTOPRENE+PTFE H = HYTREL W = SANTOPRENE H.R. D = EPDM N = NBR	T=PTFE S=SS D = EPDM N = NBR	P = PP S = SS Z = PE-UHMWE	D = EPDM V = VITON N = NBR T = PTFE	1 = BSPP 2 = FLANGED 5 = NPT	- = ZONE 2	AB = STANDARD

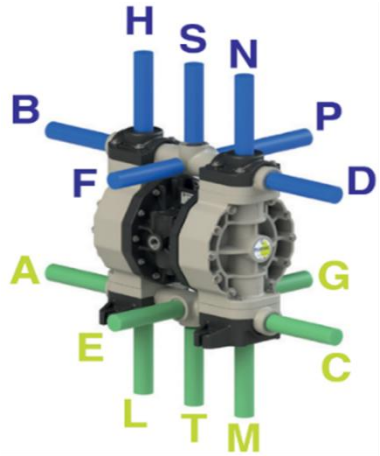

AVAILABLE CONNECTIONS

DELIVERY: B-D-S-F-P

SUCTION: A-C-T-E-G

PACKING DIMENSION

CARTON BOX: 54 x 32 x 63 cm

DIMENSIONS

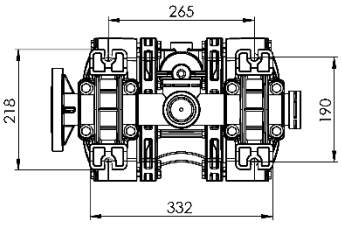

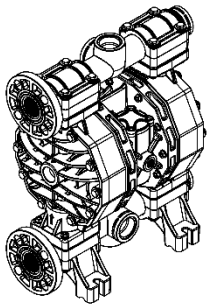

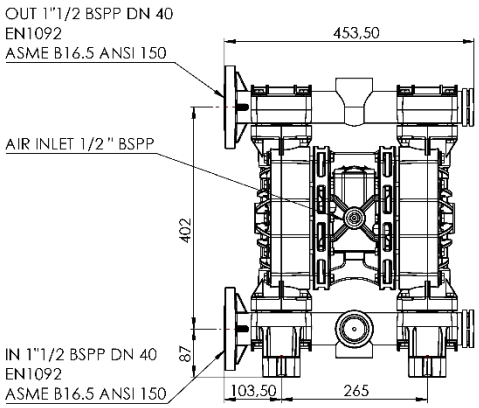

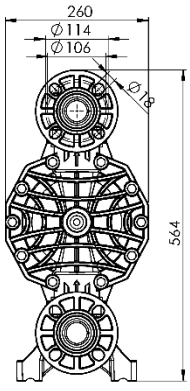

Technical data are approximate and not binding for the manufacturer who reserves the right to change them without notice at any time.

Made in Italy

fluimac pump solution

FLUIMAC S.r.l. - Via Breascia ,1 - 21049 - Tradate - VA - ITALY
info@fluimac.com - www.fluimac.com
tel. +39 0331 866688 - Fax +39 0331 864870
P.I./VAT 03259160129

ISO 9001:2008

P 400



PVDF+CF

WEIGHT 22,2 kg

TEMPERATURE -20°C +90°C

TECHNICAL DATA

Fluid connections	**1" 1/2 BSPP - DN 40**
Air connection	**1/2" BSPP**
Max. flow rate	**380 lt/min**
Max air pressure	**8 bar**
Max delivery head	**80 m**
Max suction lift dry	**5 m**
Max suction lift wet	**9,8 m**
Max solid passing	**8 mm**
Noise level	**78 dB**
Max viscosity	**40.000 cps**
Displacement per stroke	**1200 CC ~**

Displacement per stroke may vary based on suction condition, discharge head, air pressure and fluid type.

II 3/3 G Ex h IIB T4 Gc

II 3 D Ex h IIIB T135°C Dc X

PERFORMANCE

The curves and performance values refer to pumps with submerged suction and free delivery outlet, with water at 20 °C. These data may vary according to the construction materials and hydraulic conditions.

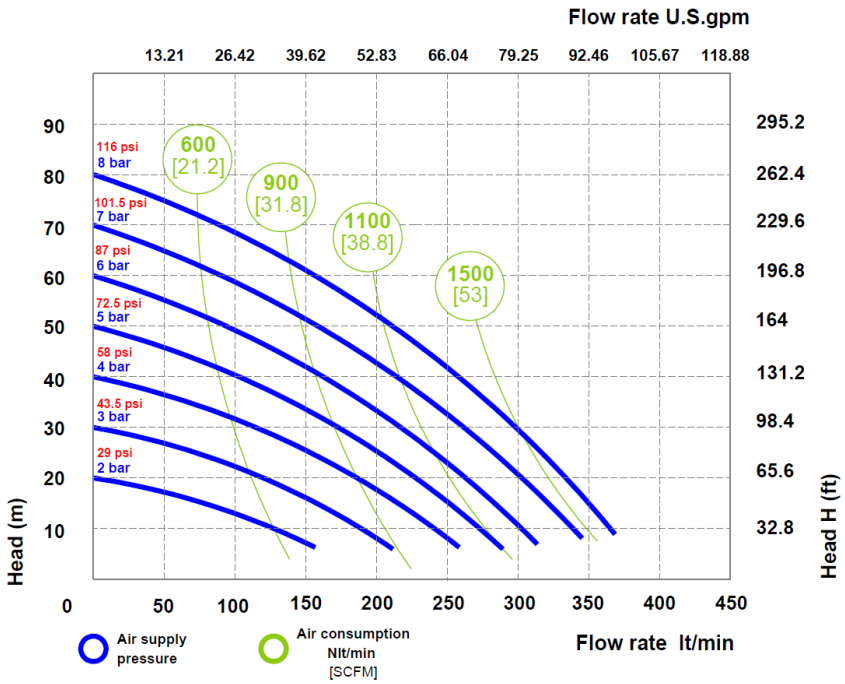

Made in Italy

fluimac pump solution

FLUIMAC S.r.l. - Via Breascia ,1 - 21049 - Tradate - VA - ITALY
info@fluimac.com - www.fluimac.com
tel. +39 0331 866688 - Fax +39 0331 864870
P.I./VAT 03259160129

ISO 9001:2008

P 400

COMPOSITION

MODEL	CASING	DIAPHRAGM	BALLS	SEATS	GASKET	CONNECTIONS	ATEX	PORTS
P0400	KC = PVDF+CF	HT = HYTREL+PTFE MT = SANTOPRENE+PTFE H = HYTREL W = SANTOPRENE H.R. D = EPDM N = NBR	T=PTFE S=SS D = EPDM N = NBR	K=PVDF S=SS	D = EPDM V = VITON N = NBR T = PTFE	1 = BSPP 2 = FLANGED 5 = NPT	- = ZONE 2	AB = STANDARD

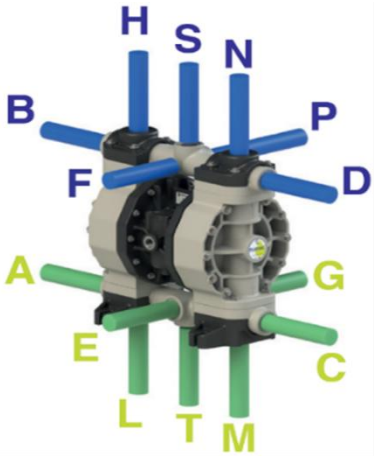

AVAILABLE CONNECTIONS

DELIVERY: B-D-S-F-P

SUCTION: A-C-T-E-G

PACKING DIMENSION

CARTON BOX: 54 x 32 x 63 cm

DIMENSIONS

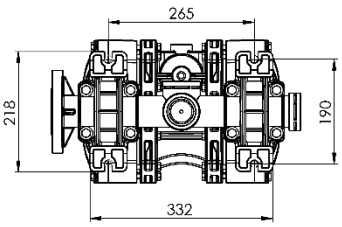

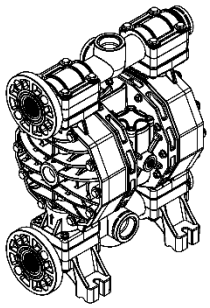

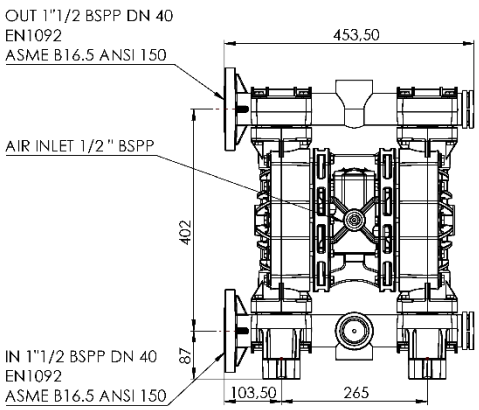

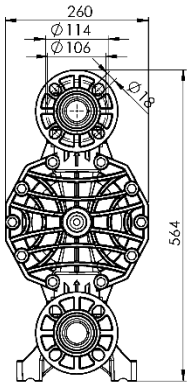

Technical data are approximate and not binding for the manufacturer who reserves the right to change them without notice at any time.

Made in Italy

fluimac pump solution

FLUIMAC S.r.l. - Via Breascia ,1 - 21049 - Tradate - VA - ITALY
info@fluimac.com - www.fluimac.com
tel. +39 0331 866688 - Fax +39 0331 864870
P.I./VAT 03259160129

ISO 9001:2008

P 400

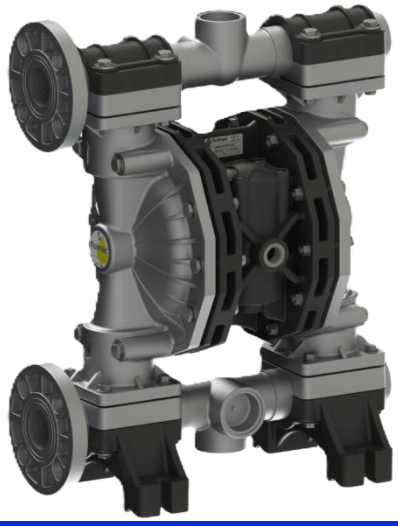

ALUMINUM

WEIGHT 22,2 kg

TEMPERATURE -20°C +95°C

TECHNICAL DATA

Fluid connections	**1" 1/2 BSPP - DN 40**
Air connection	**1/2" BSPP**
Max. flow rate	**380 lt/min**
Max air pressure	**8 bar**
Max delivery head	**80 m**
Max suction lift dry	**5 m**
Max suction lift wet	**9,8 m**
Max solid passing	**8 mm**
Noise level	**78 dB**
Max viscosity	**40.000 cps**
Displacement per stroke	**1200 CC ~**

Displacement per stroke may vary based on suction condition, discharge head, air pressure and fluid type.

Ex II 3/3 G Ex h IIB T4 Gc

Ex II 3 D Ex h IIIB T135°C Dc X

CE EAC UKCA

PERFORMANCE

The curves and performance values refer to pumps with submerged suction and free delivery outlet, with water at 20 °C. These data may vary according to the construction materials and hydraulic conditions.

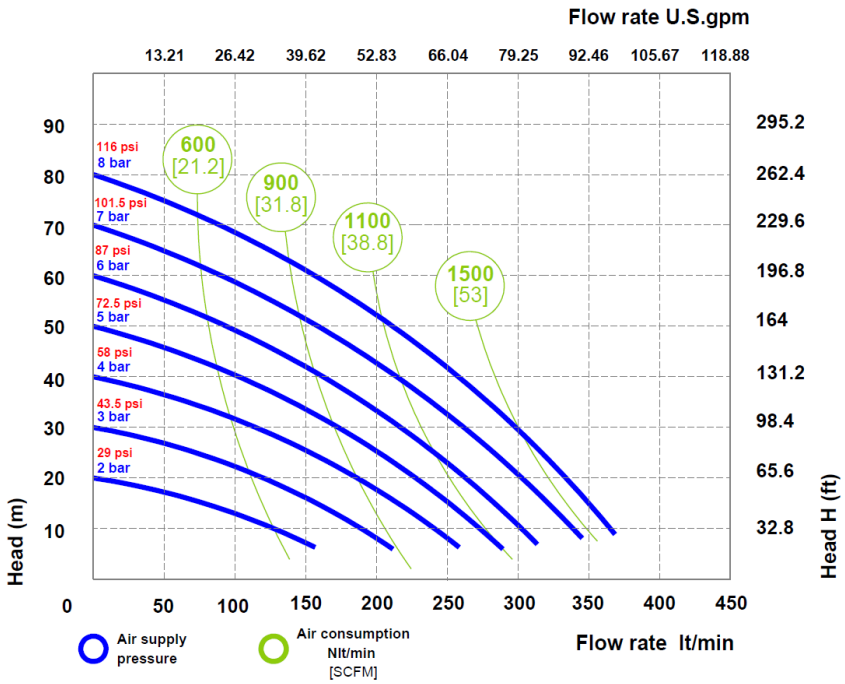

Made in Italy

fluimac pump solution

FLUIMAC S.r.l. - Via Breascia ,I - 21049 - Tradate - VA - ITALY
info@fluimac.com - www.fluimac.com
tel. +39 0331 866688 - Fax +39 0331 864870
P.I./VAT 03259160129

ISO 9001:2008

P 400

COMPOSITION

MODEL	CASING	DIAPHRAGM	BALLS	SEATS	GASKET	CONNECTIONS	ATEX	PORTS
P0400	A = ALU	HT = HYTREL+PTFE MT = SANTOPRENE+PTFE H = HYTREL W = SANTOPRENE H.R. D = EPDM N = NBR	T=PTFE S=SS D = EPDM N = NBR	S=SS	D = EPDM V = VITON N = NBR T = PTFE	1 = BSPP 2 = FLANGED 5 = NPT	- = ZONE 2	AB = STANDARD

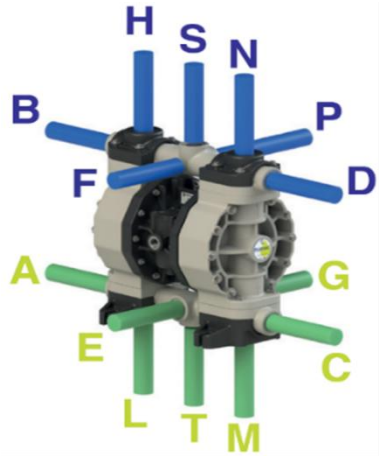

AVAILABLE CONNECTIONS

DELIVERY: B-D-S-F-P

SUCTION: A-C-T-E-G

PACKING DIMENSION

CARTON BOX: 54 x 32 x 63 cm

DIMENSIONS

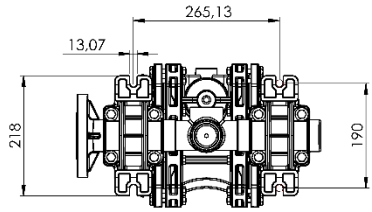

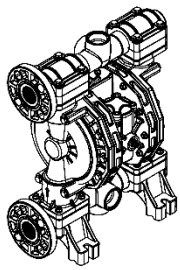

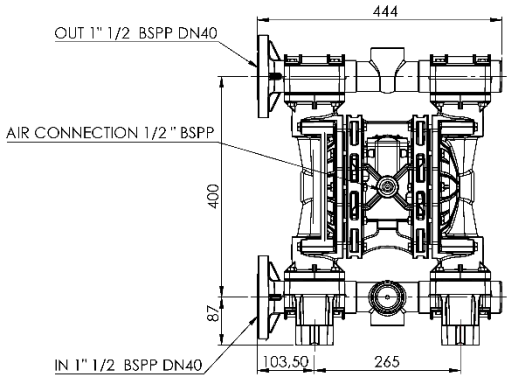

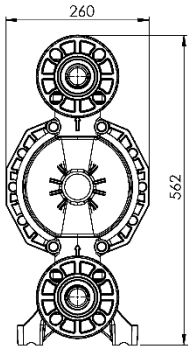

Technical data are approximate and not binding for the manufacturer who reserves the right to change them without notice at any time.

Made in Italy

fluimac pump solution

FLUIMAC S.r.l. - Via Breascia ,1 - 21049 - Tradate - VA - ITALY
info@fluimac.com - www.fluimac.com
tel. +39 0331 866688 - Fax +39 0331 864870
P.I./VAT 03259160129

ISO 9001:2008

P 400



SS AISI 316

WEIGHT 25,3 kg

TEMPERATURE -20°C +95°C

TECHNICAL DATA

Fluid connections	**1" 1/2 BSPP**
Air connection	**1/2" BSPP**
Max. flow rate	**380 lt/min**
Max air pressure	**8 bar**
Max delivery head	**80 m**
Max suction lift dry	**5 m**
Max suction lift wet	**9,8 m**
Max solid passing	**8 mm**
Noise level	**78 dB**
Max viscosity	**40.000 cps**
Displacement per stroke	**1200 CC ~**

Displacement per stroke may vary based on suction condition, discharge head, air pressure and fluid type.

Ex II 3/3 G Ex h IIB T4 Gc

Ex II 3 D Ex h IIIB T135°C Dc X

PERFORMANCE

The curves and performance values refer to pumps with submerged suction and free delivery outlet, with water at 20 °C. These data may vary according to the construction materials and hydraulic conditions.

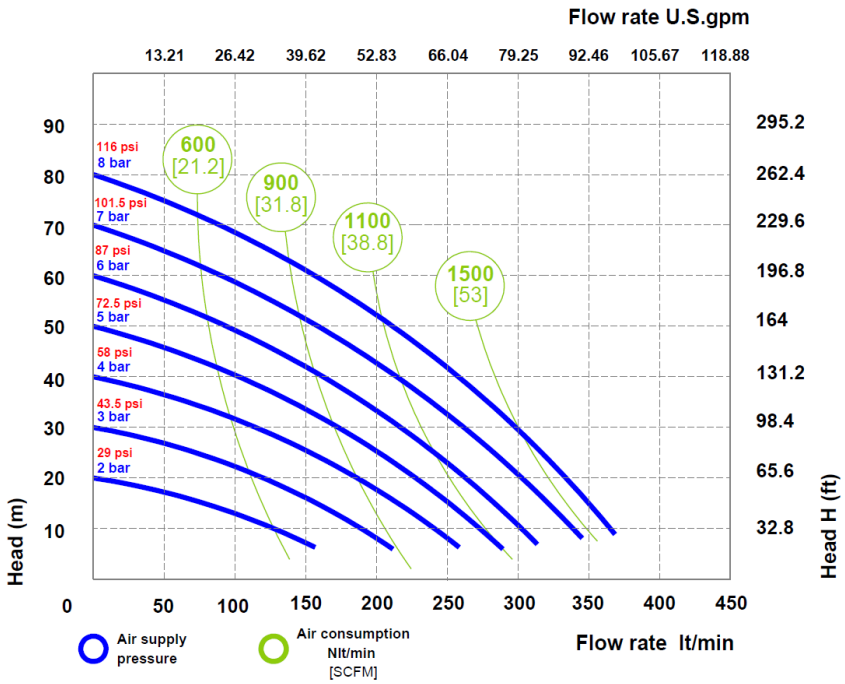

Made in Italy

fluimac pump solution

FLUIMAC S.r.l. - Via Breascia ,1 - 21049 - Tradate - VA - ITALY

info@fluimac.com - www.fluimac.com

tel. +39 0331 866688 - Fax +39 0331 864870

P.I./VAT 03259160129

ISO 9001:2008

P 400

COMPOSITION

MODEL	CASING	DIAPHRAGM	BALLS	SEATS	GASKET	CONNECTIONS	ATEX	PORTS
P0400	S = SS	HT = HYTREL+PTFE MT = SANTOPRENE+PTFE H = HYTREL W = SANTOPRENE H.R. D = EPDM N = NBR	T=PTFE S=SS D = EPDM N = NBR	S=SS	T = PTFE	1 = BSPP 2 = FLANGED 5 = NPT	- = ZONE 2	EF = STANDARD

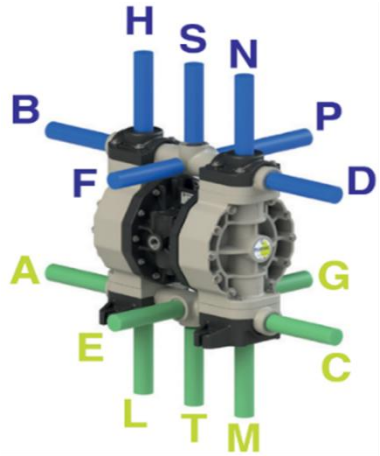

AVAILABLE CONNECTIONS

DELIVERY: F-P

SUCTION: E-G

PACKING DIMENSION

CARTON BOX: 46 x 32 x 59 cm

DIMENSIONS

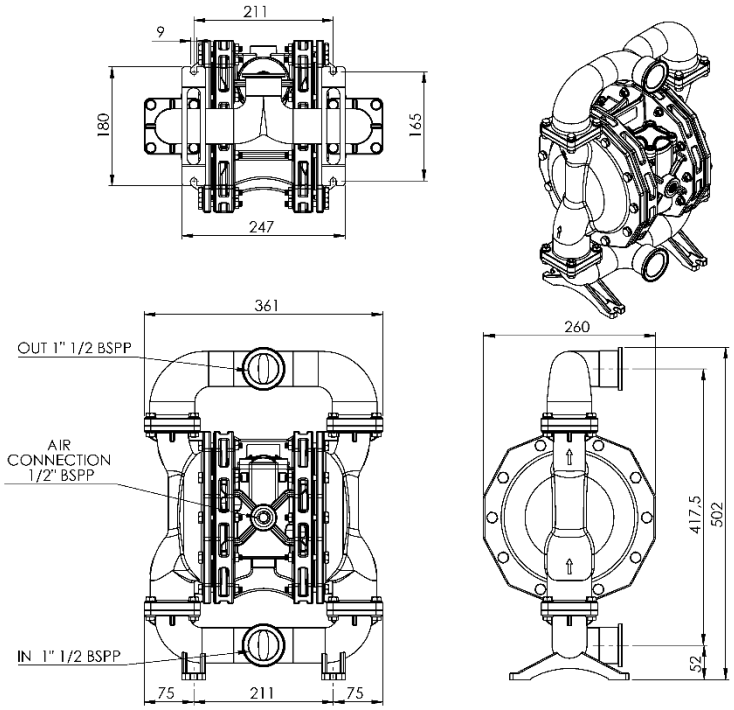

Technical data are approximate and not binding for the manufacturer who reserves the right to change them without notice at any time.

Made in Italy

fluimac pump solution

FLUIMAC S.r.l. - Via Breascia ,1 - 21049 - Tradate - VA - ITALY
info@fluimac.com - www.fluimac.com
tel. +39 0331 866688 - Fax +39 0331 864870
P.I./VAT 03259160129

ISO 9001:2008