DATA SHEET

2026-07-07

DAB PUMPS S.p.A.
Via Marco Polo, 14 - 35035 Mestrino (PD), Italy
Tel. +39 049 5125000 - Fax +39 049 5125950
www.dabpumps.com

Receiver

Company
Reference
Address
Phone
Fax
E-mail

Item n° : 60211857

Customer pos. no.:

Model :

K 14/400 1x230 50 IE2

Pump data

MEI ≥ 0,40

Pressure rating :	600 kPa
Min. fluid temperature :	-15 °C
Max. fluid temperature :	110 °C
Max. Ambient temperature :	40 °C

Requested data

Flow :	
Head :	
Fluid (%) :	
Fluid Temperature :	20 °C
Density :	998.3 kg/m³
Kinematic viscosity :	1.005 mm²/s
Vapor pressure :	2.34 kPa

Hydraulic data (duty point)

Flow :	
Head :	
NPSH :	
Shaft power P2 :	
Efficiency :	

Materials

Pump body	Cast iron 200 UNI ISO 185
Support	Cast iron 200 UNI ISO 185
Impeller	Cast iron 200 UNI ISO 185
Mechanical seal	Carbon/Ceramic
O-Ring	EPDM Rubber
Shaft with rotor	AISI 303 X10 CrNiS 1809 UNI 6900/71

Motor data

Motor brand :	DAB	
Nominal power P2 :	1.4 kW	
Rated speed :	2850 1/min	
Rated voltage :	1~ 230 V	50 Hz
Nominal current :	9 A	
Degree of protection :	IP 55	50 Hz
Max. Power input P1	2.02 kW	

Pump connection

Suction side :	2 " G	/	600 kPa
Discharge side :	2 " G	/	600 kPa

Curve tolerance according to ISO 9906

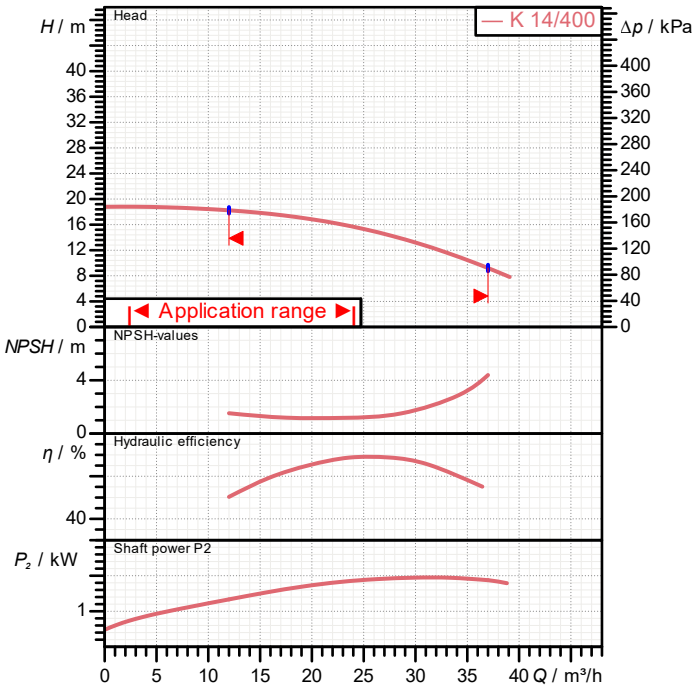

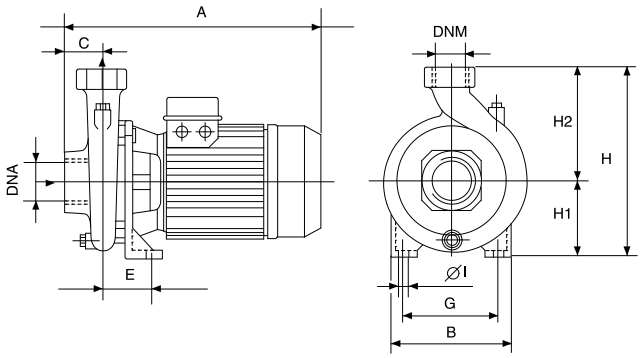

Weight : 24.5 kg

Dimensions in mm

A	430
B	200
C	62
DNA	2" G
DNM	2" G
E	74
G	120
H	270
H1	105
H2	165
IØ	11

DAB PUMPS reserves the right to make modifications without notice

PERFORMANCE CURVES

2026-07-07

DAB PUMPS S.p.A.
Via Marco Polo, 14 - 35035 Mestrino (PD), Italy
Tel. +39 049 5125000 - Fax +39 049 5125950
www.dabpumps.com

MAKING WATER EASY

	Receiver
Company	
Reference	
Address	
Phone	
Fax	
E-mail	

K 14/400 1x230 50 IE2

Curve tolerance according to ISO 9906

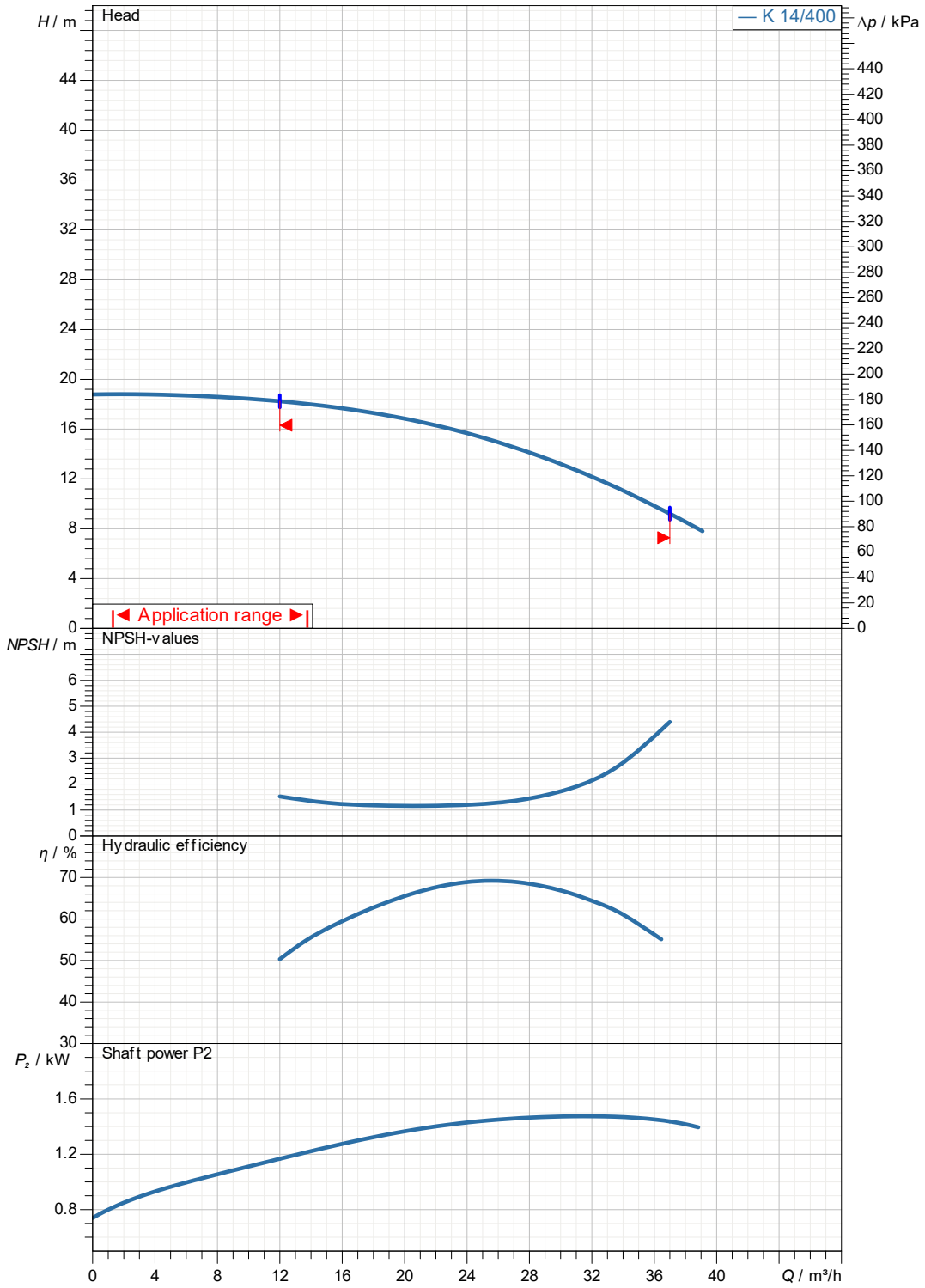

Hydraulic data (dutypoint)

Suction side :	Discharge side :	Flow :	Head :	Rated speed :
2 " G 600 kPa	2 " G 600 kPa			2850 1/min

Project	Project ID	Created by	Created on
			2026-07-07

DAB PUMPS reserves the right to make modifications without notice

DIMENSIONAL DRAWING

2026-07-07

DAB PUMPS S.p.A.
Via Marco Polo, 14 - 35035 Mestrino (PD), Italy
Tel. +39 049 5125000 - Fax +39 049 5125950
www.dabpumps.com

MAKING WATER EASY

Receiver

Company
Reference
Address
Phone
Fax
E-mail

K 14/400 1x230 50 IE2

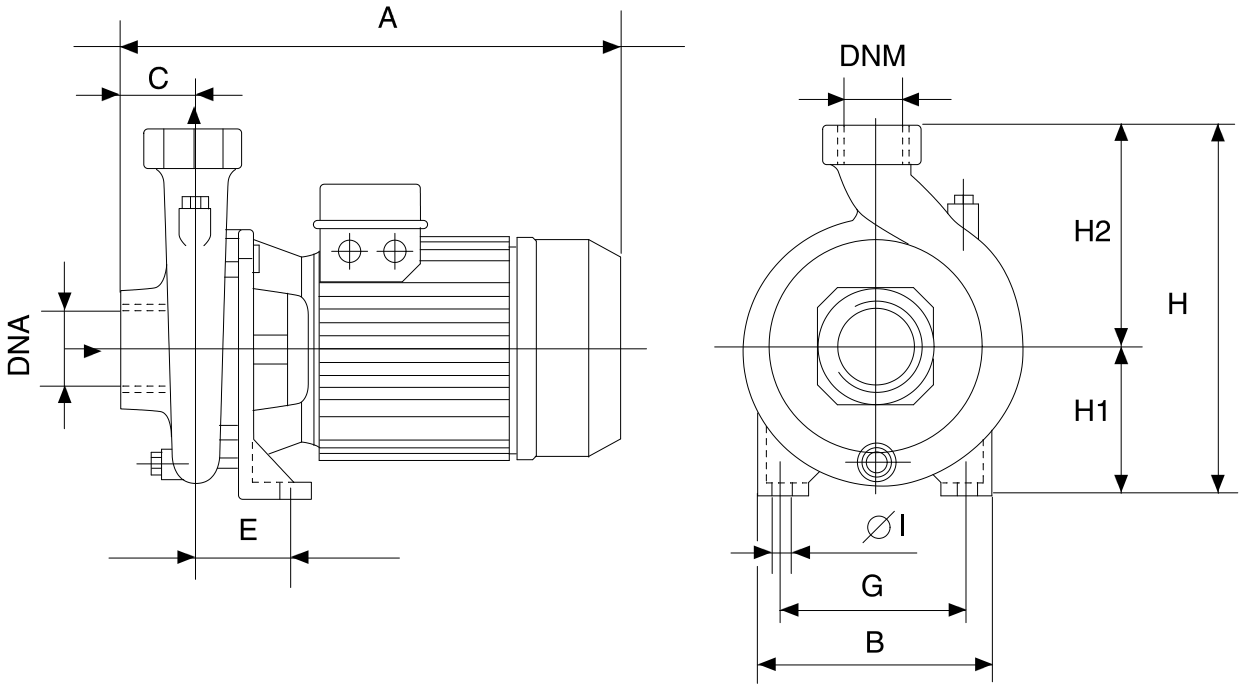

	Dimensions in mm						Pump connection
1	A	430					
2	B	200					Suction
3	C	62					2 " G
4	DNA	2" G					600 kPa
5	DNM	2" G					
6	E	74					
7	G	120					Discharge
8	H	270					2 " G
9	H1	105					600 kPa
10	H2	165					
11	IØ	11					

Project	Project ID	Created by	Created on
			2026-07-07

DAB PUMPS reserves the right to make modifications without notice