DATA SHEET

2026-08-27

DAB PUMPS S.p.A.
Via Marco Polo, 14 - 35035 Mestrino (PD), Italy
Tel. +39 049 5125000 - Fax +39 049 5125950
www.dabpumps.com

Receiver

Company
Reference
Address
Phone
Fax
E-mail

Item n° : 60219347H

Customer pos. no.:

Model :
FEKA VS 550 M - A

Pump data

Free passage :	50 mm
Pressure rating :	
Min. fluid temperature :	0
Max. fluid temperature :	50 °C
Max. Ambient temperature :	40 °C

Requested data

Flow :	
Head :	
Fluid :	Water
Fluid Temperature :	20 °C
Density :	998.3 kg/m³
Kinematic viscosity :	1.005 mm²/s
Vapor pressure :	2.34 kPa

Hydraulic data (duty point)

Flow :

Head :

Materials

Pump body	Stainless Steel AISI 304
Impeller	Stainless Steel AISI 304
Motor casing	Stainless Steel AISI 304
Mechanical seal pump side	Silicon carbide/Silicon carbide
Mechanical seal motor side	Carbon/Alumina
Motor shaft pump side	Stainless Steel AISI 316
Motor shaft motor side	Steel C10

Curve tolerance according to ISO 9906

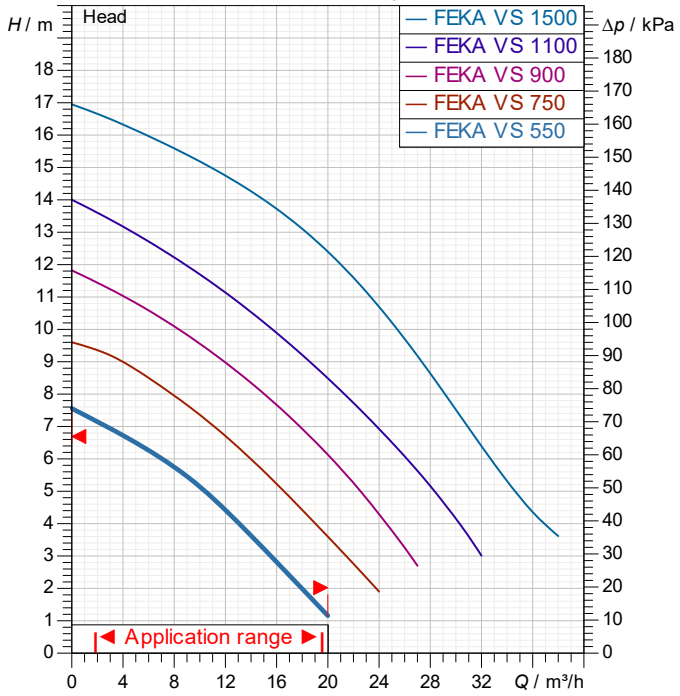

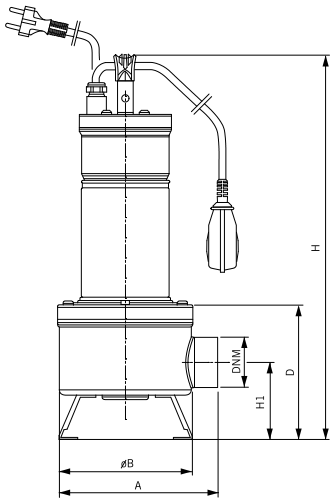

Motor data

Motor brand :	DAB	
Max. Power input P1 :	0.9 kW	
Nominal power P2 :	0.55 kW	
Rated speed :	2800 1/min	
Rated voltage :	1~ 220-240 V	50 Hz
Nominal current :	4.1 A	
Degree of protection :	IP 68	

Weight : 12.5 kg

Dimensions in mm

A	203
B	170
D	172
DNM	2" F
H	475
H1	98

Pump connection

Suction side :		/
Discharge side :	2 " GAS	/ --

DAB PUMPS reserves the right to make modifications without notice

PERFORMANCE CURVES

2026-08-27

DAB PUMPS S.p.A.
Via Marco Polo, 14 - 35035 Mestrino (PD), Italy
Tel. +39 049 5125000 - Fax +39 049 5125950
www.dabpumps.com

MAKING WATER EASY

	Receiver
Company	
Reference	
Address	
Phone	
Fax	
E-mail	

FEKA VS 550 M - A

Curve tolerance according to ISO 9906

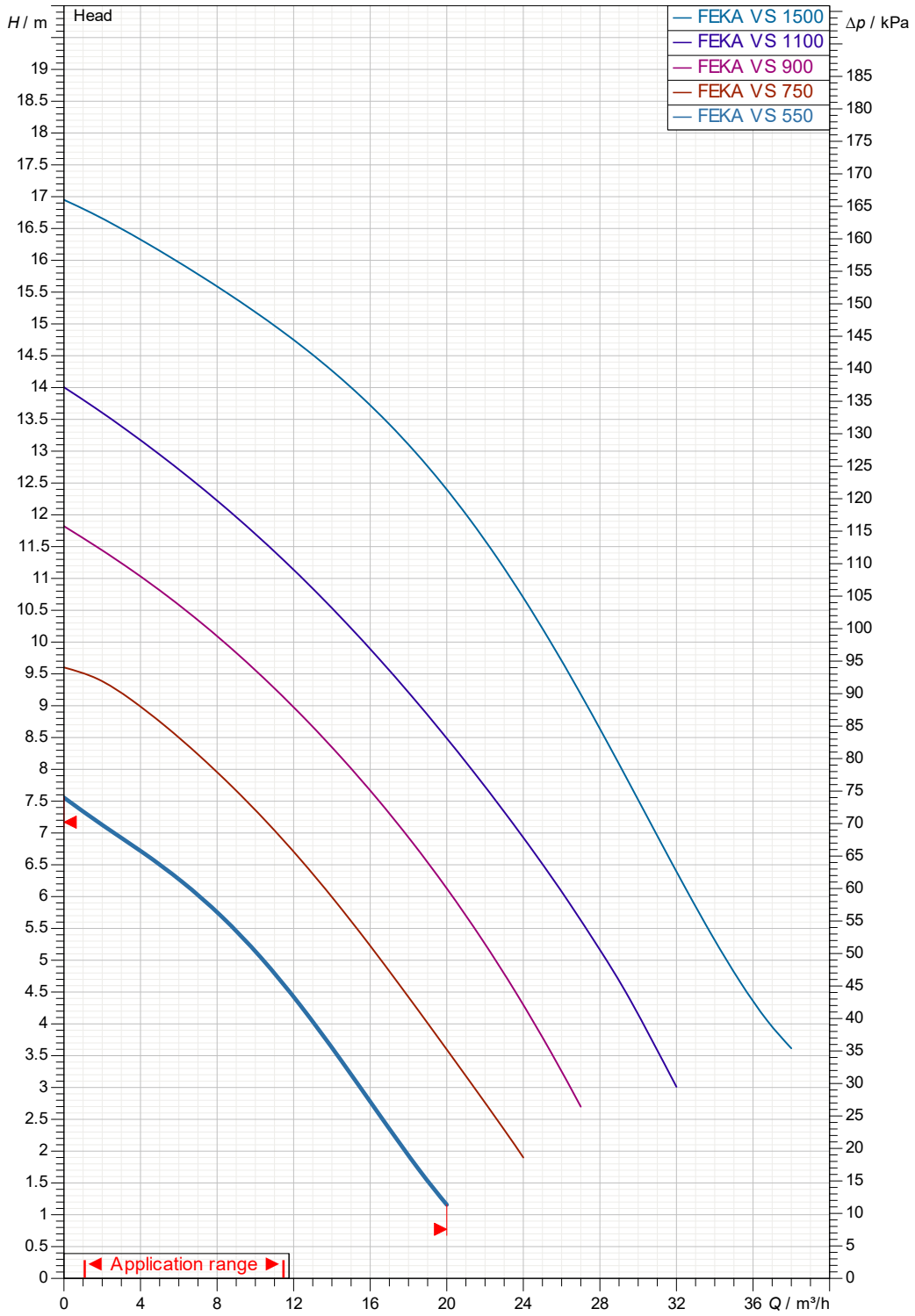

Hydraulic data (dutypoint)

Suction side :	Discharge side :	Flow :	Head :	Rated speed :
	2 " GAS --			2800 1/min

MAIN_PROJECT_TITLE	BUSINESS_PROCESS_ID	OWNER_	ISSUE_DATE
			2026-08-27

DAB PUMPS reserves the right to make modifications without notice

DIMENSIONAL DRAWING

2026-08-27

DAB PUMPS S.p.A.
Via Marco Polo, 14 - 35035 Mestrino (PD), Italy
Tel. +39 049 5125000 - Fax +39 049 5125950
www.dabpumps.com

MAKING WATER EASY

Receiver

Company
Reference
Address
Phone
Fax
E-mail

FEKA VS 550 M - A

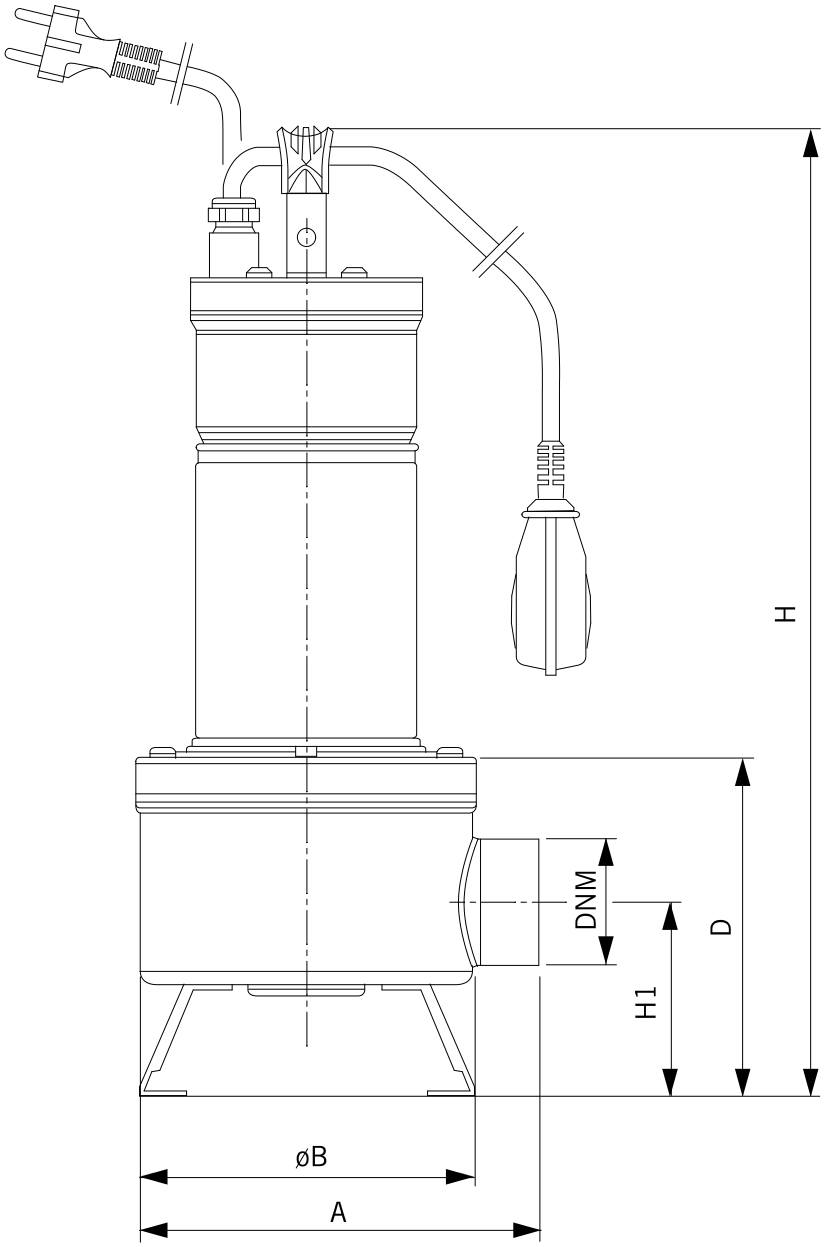

	Dimensions in mm						Pump connection
1	A	203					
2	B	170					Suction
3	D	172					
4	DNM	2" F					
5	H	475					
6	H1	98					
7							Discharge
8							2 " GAS
9							--
10							
11							

MAIN_PROJECT_TITLE	BUSINESS_PROCESS_ID	OWNER_	ISSUE_DATE
			2026-08-27

DAB PUMPS reserves the right to make modifications without notice